Pre-Rel B Testbed Science Processing/IMF EDC RAID Configuration

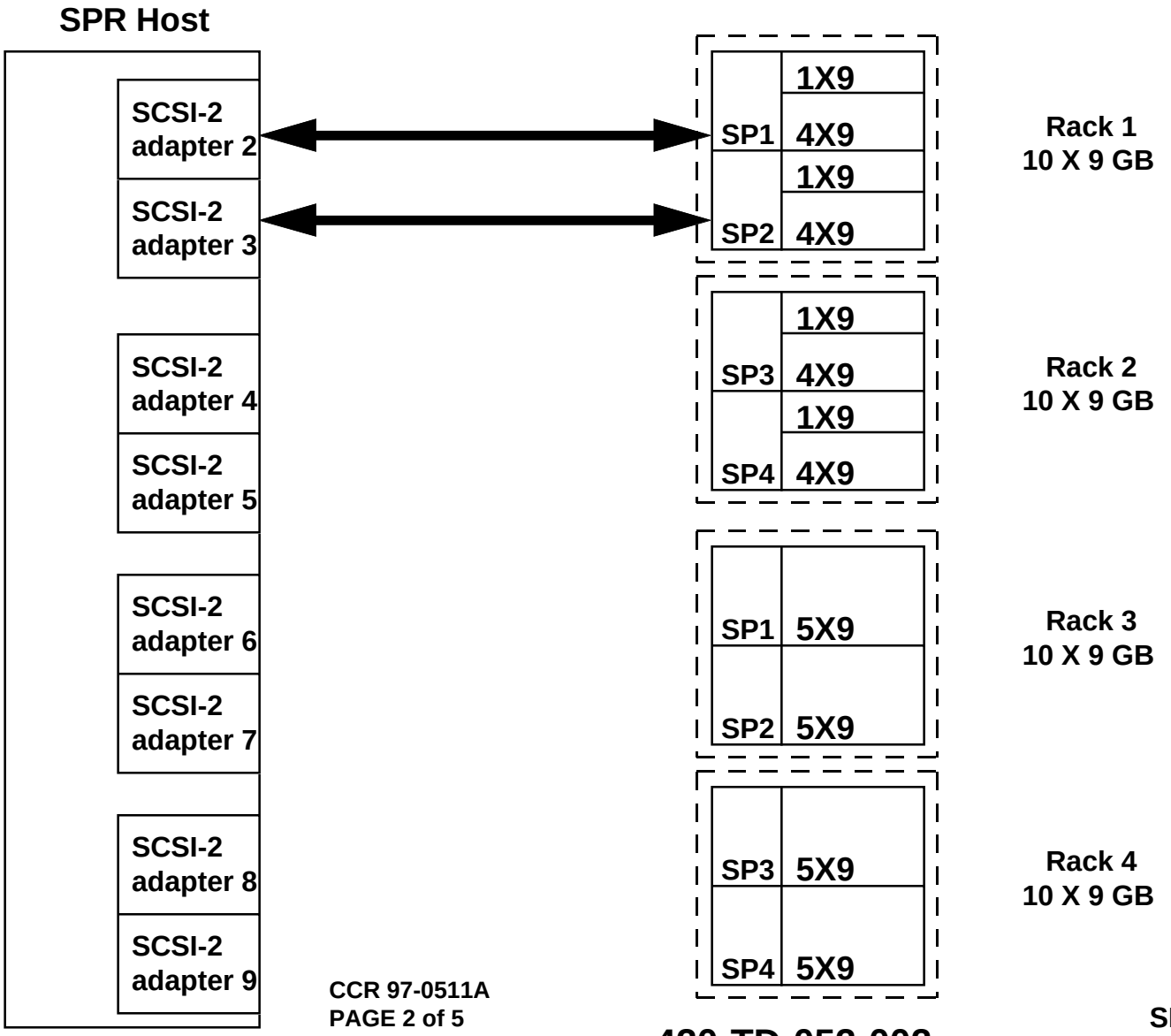

CCR 97-0511A
PAGE 2 of 5

6/4/97

420-TD-052-002

SP-storage processor

IMF RAID Disk Partitions - Pre-Rel B EDC DAAC

2/3 of vola0 is for runtime libraries; 1/3 of vola1 for SSIT

Racks1&2
4x4 x9 GB
RAID Level 5

SPRHW-EDC-1

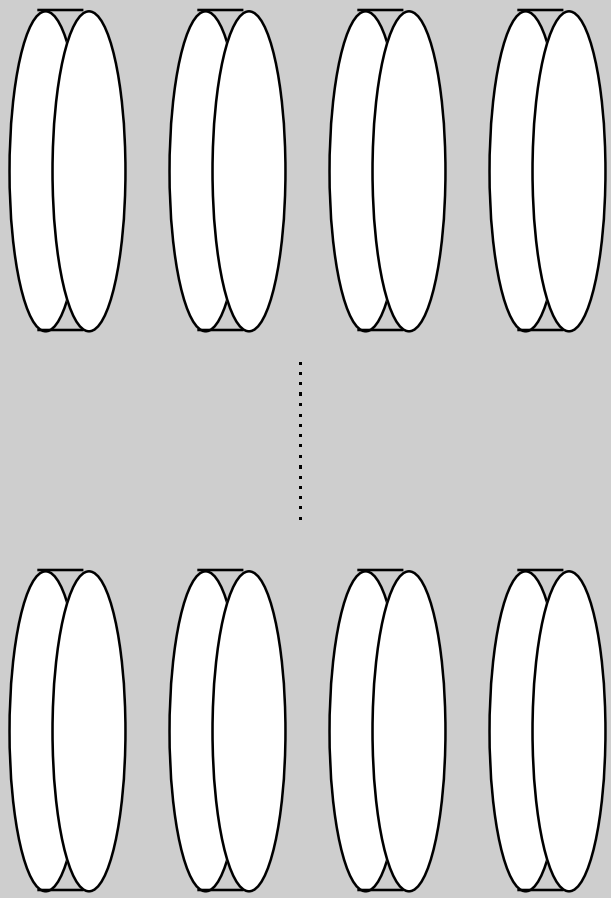

28.8 GB - File Sys **IMF Data**

Stripe across all four controllers, using all available disks

Utilize default block sizing (i.e. 4 or 8KB)

28.8 GB - File Sys **IMF Data**

115.2 GB Total

CCR 97-0511A
PAGE 3 of 5
6/4/97

420-TD-052-002

IMF RAID Disk Partitions - Pre-Rel B EDC DAAC

Racks1&2
4x1 x9 GB
Independent
Disk

SPRHW-EDC-1

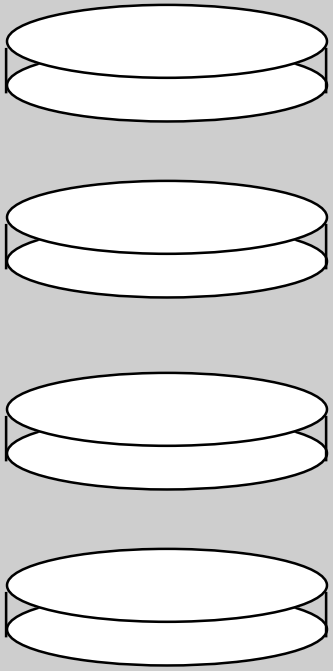

9 GB - File Sys **Science DAP Ingest**

9 GB - File Sys **Science DAP Ingest**

9 GB - File Sys **Science Software Pull**

9 GB - File Sys **Spare**

Science Processing RAID Disk Partitions - Pre-Rel B EDC DAAC

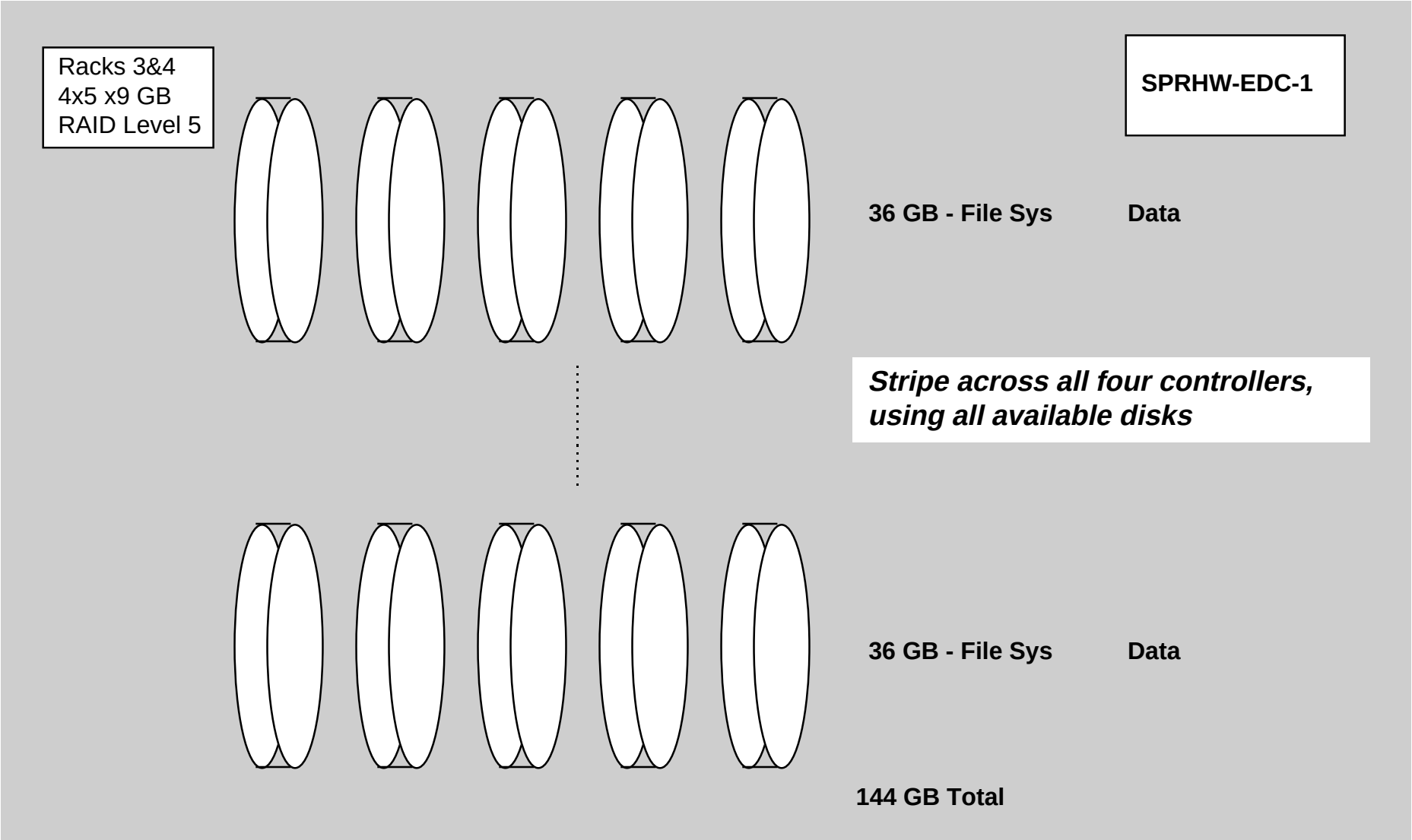

CCR 97-0511A
PAGE 5 of 5
GM 3/12/97

420-TD-052-002